HDL-MHD04A.231

4CH Universal Dimming Actuator

Datasheet

Issued: April 17, 2019
Edition V1.0.0

Figure 1. 4CH Universal Dimming Actuator

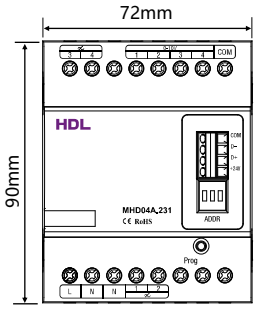

Figure 2. Dimensions - Front View

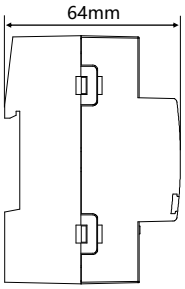

Figure 3. Dimensions - Side View

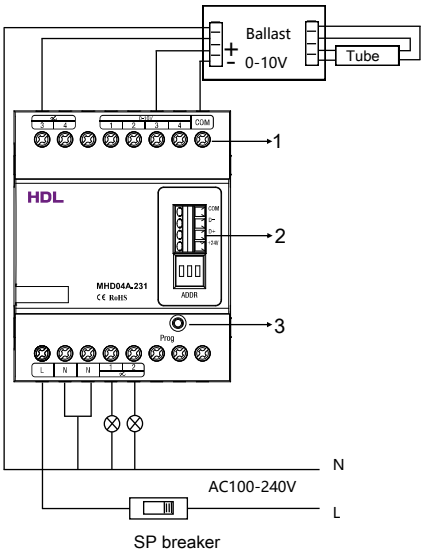

Figure 4. Wiring

Overview

4CH Universal Dimming Actuator (See Figure 1) is a multifunction control module, which enables the switch control between four channels of 0-10V dimming output and four channels of MOSFET dimming output. In conjunction with HDL Hotel Room Management System, the dimming actuator can control lights (including incandescent light, dimmable LED light, 0-10V dimmable fluorescent light, low-voltage halogen light, etc.).

Functions

- The dimming actuator enables the switch control between four channels of 0-10V dimming output and four channels of MOSFET dimming output. In conjunction with MOSFET dimming mode, the 0-10V dimming mode enables dimming control of the 0-10V dimming devices. And the MOSFET dimming mode enables trailing dimming control of the dimmable lights (including incandescent light, dimmable LED light, low-voltage halogen light, etc.)
- Isolated 0-10V output.
- The MOSFET dimming channels support short circuit protection and over heat protection.
- The ID address of the dimming actuator supports simple configuration via dial code control, or full configuration via HDL Hotel Room Management System.
- Inner Buspro communication is adopted. In conjunction with HDL Hotel Management System, the dimming actuator can work in some more complicated scenes as a channel expansion module of HDL hotel host.

Important Notes

- Inner Buspro connection – Series connection (hand-in-hand recommended)
- Check and ensure all connections are correct after installation. The AC power must not connect to 0-10V connection terminals.
- Output current – The current of each MOSFET dimming channel must not exceed 0.5A and the total current must not exceed 2A.
- Load types – Incandescent light, low-voltage halogen light, dimmable LED Light, 0-10V dimming driver etc.
- Trailing edge mode is not allowed to be used when inductive load is connected.
- The dimming temperature should not exceed 45℃.

Product Information

Dimensions - See Figure 2 - 3

Wiring - See Figure 4

1. The channel connected to load devices
2. Inner Buspro: HDL Inner Buspro, connected to the hotel host controller.
   Dial code 000: The original address of each channel is configured by software.
   Dial code 001: The channel address is 1;
   Dial code 010: The channel address is 6;
   Dial code 011: The channel address is 11;
   Dial code 100: The channel address is 16;
   Dial code 101: The channel address is 21;
   Dial code 110: The channel address is 26;
   Dial code 111: The channel address is 31.
3. Programming button & indicator: The indicator flickers, when the dimming actuator runs normally. Press the programming button for 1 second, the indicator turns red, then the channel original address can be read and configured via HDL Buspro Setup Tool/ (previous) HDL Hotel Room Management System. Press the button for 3 seconds, when the indicator turns red, it switches the MOSFET dimming mode to the 0-10V dimming mode; when the indicator turns green, it switches the 0-10V dimming mode to MOSFET dimming mode. Press the button once, when the indicator flickers evenly and continuously in green, the current working mode is MOSFET dimming mode; and when the indicator flickers evenly and continuously in red, the current working mode is 0-10V dimming mode.

Note：The 4CH Universal Dimming Actuator shall be used in conjunction with the Hotel Room Control Host.

Product installation - See Figure 5 - 7

Step 1. Fix the DIN rail with screws.
Step 2. Buckle the bottom cap of the actuator on the edge of the DIN rail.
Step 3. Press the device on the DIN rail, slide it and fix it up until an appropriate position is adjusted.

Safety Precautions

- The installation and commissioning of the device must be carried out by HDL or the organization designated by HDL. For planning and construction of electric installations, the relevant guidelines, regulations and standards of the respective country are to be considered.
- The device should be installed with DIN rail in DB box. HDL does not take responsibility for all the consequences caused by installation and wire connection that are not in accordance with this document.
- Please do not privately disassemble the device or change components, otherwise it may cause mechanical failure, electric shock, fire or body injury.
- Please resort to our customer service department or designated agencies for maintenance service. The warranty is not applicable for the product fault caused by private disassembly.

Package Contents

HDL-MHD04A.231*1 / Datasheet*1 / Label*5

Figure 5

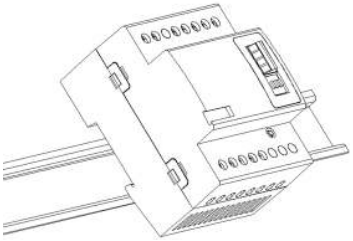

Figure 6

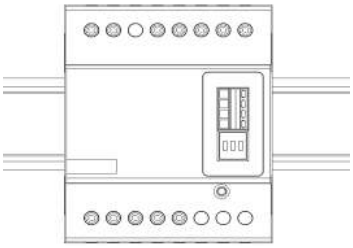

Figure 7

Figure 5 – 7. Installation

Technical Data

Basic Parameters	
Working voltage	15~30V DC
Working current	55mA/24V DC
Input voltage	AC100-240V(50/60Hz)
Output channel	Enables the switch control between four channels of 0-10V dimming output and four channels of MOSFET dimming output.
0-10V output	5mA/CH
MOSFET output channel	0.5A/CH
MOSFET dimming mode	Trailing edge
MOSFET dimming curves	Linear
External Environment	
Working temperature	-5℃~45℃
Working relative humidity	≤90%
Storage temperature	-20℃~60℃
Storage relative humidity	≤93%
Specifications	
Dimensions	72mm×90mm×64mm
Net weight	234g
Housing material	Nylon, PC
Installation	35mm DIN rail installation (See Figure 5 - 7)
Protection rating (Compliant with EN 60529)	IP20

Name and Content of Hazardous Substances in Products

Components	Hazardous substances					
	Lead (Pb)	Mercury (Hg)	Cadmium (Cd)	Chromium VI (Cr (VI))	Poly-brominated biphenyls (PBB)	Poly-brominated diphenyl ethers (PBDE)
Plastic	o	o	o	o	o	o
Hardware	o	o	o	o	-	-
Screw	o	o	o	×	-	-
Solder	×	o	o	o	-	-
PCB	×	o	o	o	o	o
IC	o	o	o	o	×	×

The symbol “-” indicates that the hazardous substance is not contained.

The symbol "o" indicates that the content of the hazardous substances in all the homogeneous materials of the component is below the limit requirement specified in the Standard IEC62321-2015.

The symbol “×” indicates that the content of the hazardous substance in at least one of the homogeneous materials of the part exceeds the limit requirement specified in the Standard IEC62321-2015.

Inner Buspro Cable Guide

Inner Buspro	HDL Buspro Cable	CAT5/CAT5E
DATA+	Yellow	Blue/Green
DATA-	White	Blue white/Green white
COM	Black	Brown white/Orange white
24V DC	Red	Brown/Orange

Technical support
E-mail: support@hdlautomation.com
Website: https://www.hdlautomation.com

©Copyright by HDL Automation Co., Ltd. All rights reserved.
Specifications subject to change without notice.