HDL-MHR5.231

5CH High Power Switch Actuator

Datasheet

Issued: April 7, 2018

Edition: V1.0.0

Figure 1. 5CH High Power Switch Actuator

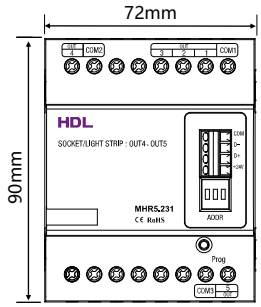

Figure 2. Dimensions - Front View

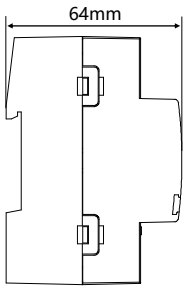

Figure 3. Dimensions - Side View

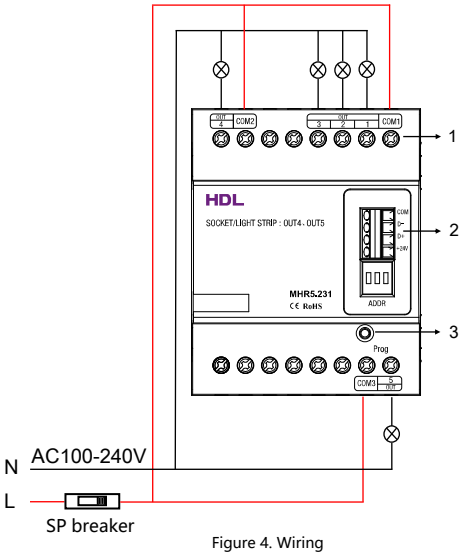

Figure 4. Wiring

Overview

5CH High Power Switch Actuator (See Figure 1) is a multifunction control module. It supports relay control outputs. In conjunction with HDL Hotel Room Management System, it can control hotel rooms, home appliances, lights and curtains etc.

Functions

- The actuator has 5 relay channels.
- The relay channel can control the switch of connected channels.
- The ID address of the actuator can be configured easily via dial code control, it also can be freely configured via HDL Hotel Room Management System.
- Inner Buspro communication is adopted. In conjunction with HDL Hotel Room Management System, the actuator can work in some more complicated scenes as a channel expansion module of HDL hotel host.

Important Notes

- Inner Buspro cable - CAT5E or dedicated HDL Buspro cable.
- Inner Buspro connection - Series connection (hand-in-hand recommended)
- Check and ensure all connections are correct after installation.
- Output channel - The current of each channel must not exceed the rated current.
- Load types - Incandescent lamp, halogen lamp, low-voltage halogen lamp, LED lamp, etc.
- Each channel needs to connect to a breaker or fuse for protection.

Product Information

Dimensions - See Figure 2 - 3

Wiring - See Figure 4

1. The channel connected to load devices
2. Inner Buspro: HDL Inner Buspro, connected to the hotel host controller.
   Dial code 000: The original address of each channel is configured by software.
   Dial code 001: The channel address is 1;
   Dial code 010: The channel address is 6;
   Dial code 011: The channel address is11;
   Dial code 100: The channel address is16;
   Dial code 101: The channel address is 21;
   Dial code 110: The channel address is 26;
   Dial code 111: The channel address is 31.
3. Programming button & indicator: The indicator flickers, when the actuator runs normally. Press the programming button for 1 second, the indicator turns red, then the channel original address can be read and configured via HDL Hotel Room Management System.

Note：The 5CH High Power Switch Actuator shall be used in conjunction with the hotel room host controller.

Installation - See Figure 5 - 7

Step 1. Fix the DIN rail with screws.

Step 2. Buckle the bottom cap of 5CH High Power Switch Actuator on the edge of the DIN rail.

Step 3. Press the device on the DIN rail, slide it and fix it up until an appropriate position is adjusted.

Safety Precautions

- The installation and commissioning of the device must be carried out by HDL or the organization designated by HDL. For planning and construction of electric installations, the relevant guidelines, regulations and standards of the respective country are to be considered.
- The device should be installed with DIN rail in DB box. HDL does not take responsibility for all the consequences caused by installation and wire connection that are not in accordance with this document.
- Please do not privately disassemble the device or replace parts, otherwise it may cause mechanical failure, electric shock, fire or body injury.
- Please resort to our customer service department or designated agencies for maintenance service. The warranty is not applicable for the product fault caused by private disassembly.
- It is not allowed to exceed the range.

Package Contents

HDL-MHR5.231*1 / Datasheet*1 / Label*5

Figure 5

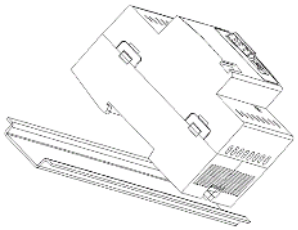

Figure 6

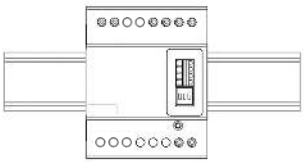

Figure 7

Figure 5 – 7. Installation

Technical Data

Basic Parameters	
Working voltage	15~30V DC
Working current	75mA/24V DC
Channel control	3CH/5A/AC100~240V Relay (CH1~3)
	2CH/10A/AC100~240V Relay (CH4~5)
External Environment	
Working temperature	-5℃~45℃
Working relative humidity	≤90%
Storage temperature	-20℃~60℃
Storage relative humidity	≤93%
Specifications	
Dimensions	72mm×90mm×64mm
Net weight	193g
Housing material	Nylon, PC
Installation	35mm DIN rail installation (See Figure 5 - 7)
Protection rating (Compliant with EN 60529)	IP20

Name and Content of Hazardous Substances in Products

Components	Hazardous substances					
	Lead (Pb)	Mercury (Hg)	Cadmium (Cd)	Chromium VI (Cr (VI))	Poly-brominated biphenyls (PBB)	Poly-brominated diphenyl ethers (PBDE)
Plastic	o	o	o	o	o	o
Hardware	o	o	o	o	-	-
Screw	o	o	o	×	-	-
Solder	×	o	o	o	-	-
PCB	×	o	o	o	o	o
IC	o	o	o	o	×	×

The symbol “-” indicates that the hazardous substance is not contained.

The symbol "o" indicates that the content of the hazardous substances in all the homogeneous materials of the component is below the limit requirement specified in the Standard IEC62321-2015.

The symbol “×” indicates that the content of the hazardous substance in at least one of the homogeneous materials of the part exceeds the limit requirement specified in the Standard IEC62321-2015.

Inner Buspro Cable Guide

Inner Buspro	HDL Buspro Cable	CAT5/CAT5E
DATA+	Yellow	Blue/Green
DATA-	White	Blue white/Green white
COM	Black	Brown white/Orange white
24V DC	Red	Brown/Orange

Technical support
E-mail: support@hdlautomation.com
Website: https://www.hdlautomation.com

©Copyright by HDL Automation Co., Ltd. All rights reserved.
Specifications subject to change without notice.