M/DALI.1

KNX-DALI Gateway

Hardware Version: D

Datasheet

Issued: April 8, 2019

Edition V1.0.0

Figure 1. KNX-DALI Gateway

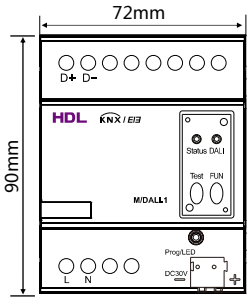

Figure 2. Dimensions - Front View

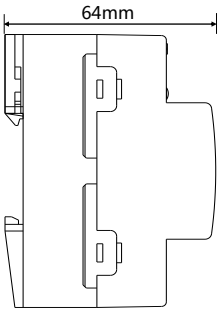

Figure 3. Dimensions - Side View

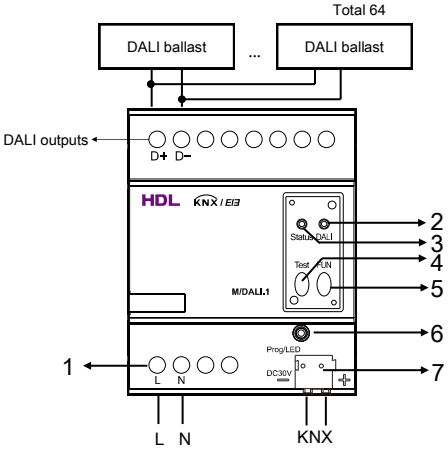

Figure 4. Wiring

Overview

With built-in DALI power supply and a single DALI Bus, KNX-DALI Gateway (See Figure 1) can be connectted to up to 64 DALI devices. Real-time failure detection enables the gateway to detect ballast failure and lamp failure etc.

Its main functions include:

- Real-time failure detection for ballasts and lamps, etc.
- Target control: Broadcast control, Channel control, Group control, Scene control, Staircase light control, Sequence control, Emergency light control
- Each channel and group supports Switch ON/OFF, Relative dimming, Absolute dimming, Status response function.
- In conjunction with **HDL KNX Assistant Software**, DALI Gateway enables address management and assignment of DALI ballast.
- Group scene control supported, which can be configured and managed via **HDL KNX Assistant Software**.
- Color temperature control function supported, which can be applied to broadcast, channel, group and scene control of DT8 type color temperature control ballasts.
- Online update.

Components and Operation

Dimensions - See Figure 2 and 3

Wiring - See Figure 4

1. Input voltage : 100~240V AC supported
2. DALI LED indicator:
   - Keeps on in green when the module is working properly,
   - Flashes in red when the DALI bus communicates.
3. LED status indicator
4. TEST button
5. FUN button
6. KNX programming button/indicator: Red LED indicates programming mode.
7. KNX interface.

Functions of Button and LED indicator

- Red LED ON/OFF:

Short press the FUN button to broadcast control on or off, and the status indicator turns red. When broadcast on, red LED is on; when broadcast off, red LED is off.

Keep pressing the FUN button for 30s to clear all the addresses. During the clearing process, the red status indicator will turn on and off for three times, and the flashing interval is one second.

- Green LED ON:

Keep pressing the TEST button for 30s to reassign the address and the green status indicator flashes during the reassigning process.

Short press the TEST button, and the ballasts will be on and off one second at a time. At this time, the green indicator indicates the status of the ballasts.

In the case of a ballast that supports DT8 type color temperature control, the lamp will be lit up, and adjusted to the coolest color temperature value, then adjusted to the warmest color temperature value, and finally extinguished, with each phase lasting for 1s.

Press the button "TEST" and "FUN" for 15 seconds simultaneously to restore the recorded fault ballast. During the recovery process, the red status indicator and the green status indicator flash alternately, and the flashing interval is 1s. If there is no ballast to restore, the red and green indicators keep on for 3s then turn off at the same time.

Installation

Installation - See Figure 5 - 7

Step 1. Fix the DIN rail with screws.

Step 2. Buckle the bottom cap of the KNX-DALI Gateway on the edge of the DIN rail.

Step 3. Press the device on the DIN rail, slide it and fix it up until an appropriate position is adjusted.

Note(s)

- Installation - Distribution box
- Programming - The device is compliant with the KNX standard and the parameters are set by the Engineering Tool Software (ETS).
- KNX Bus voltage - 21~30V DC, no AC power supply allowed.
- Input voltage - 100~240V AC supported

Safety Precautions

- The installation and commissioning of the device must be carried out by HDL or the organization designated by HDL. For planning and construction of electric installations, the relevant guidelines, regulations and standards of the respective country are to be considered.
- The device should be installed with DIN rail in DB box. HDL does not take responsibility for all the consequences caused by installation and wire connection that are not in accordance with this document.
- Please do not privately disassemble the device or change components, otherwise it may cause mechanical failure, electric shock, fire or body injury.
- Please resort to our customer service department or designated agencies for maintenance service. The warranty is not applicable for the product fault caused by private disassembly.

Package Contents

M/DALI.1*1 / Label*5 / Datasheet*1

Figure 5

1

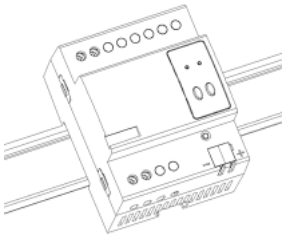

Figure 6

2

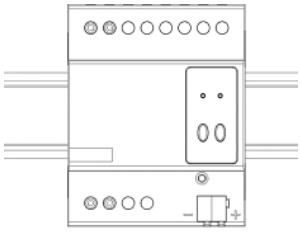

Figure 7

Figure 5 - 7. Installation

Technical Data

Basic Parameters

Working voltage	21~30V DC
Working current	5mA/30V DC
Input voltage	AC100-240V (50/60Hz)
DALI output	64 channels
Communication	KNX
Cable diameter of KNX terminal	0.6 – 0.8mm

External Environment

Working temperature	-5℃~45℃
Working relative humidity	≤90%
Storage temperature	-20℃~60℃
Storage relative humidity	≤93%

Specifications

Dimensions	72mm×90mm×64mm
Net weight	241g
Housing material	Nylon
Installation	35mm DIN rail installation (See Figure 5 - 7)
Protection rating (Compliant with EN 60529)	IP20

Name and Content of Hazardous Substances in Products

Components	Hazardous substances					
	Lead (Pb)	Mercury (Hg)	Cadmium (Cd)	Chromium VI (Cr (VI))	Poly-brominated biphenyls (PBB)	Poly-brominated diphenyl ethers (PBDE)
Plastic	o	o	o	o	o	o
Hardware	o	o	o	o	-	-
Screw	o	o	o	×	-	-
Solder	×	o	o	o	-	-
PCB	×	o	o	o	o	o
IC	o	o	o	o	×	×

The symbol “-” indicates that the hazardous substance is not contained.

The symbol "o" indicates that the content of the hazardous substances in all the homogeneous materials of the component is below the limit requirement specified in the Standard IEC62321-2015.

The symbol “×” indicates that the content of the hazardous substance in at least one of the homogeneous materials of the part exceeds the limit requirement specified in the Standard IEC62321-2015.

KNX Cable Guide

KNX	KNX cable
-	Black
+	Red

Technical support
E-mail: support@hdlautomation.com
Website: https://www.hdlautomation.com

©Copyright by HDL Automation Co., Ltd. All rights reserved.
Specifications subject to change without notice.