M/MPT14.1

KNX Modern Series DLP Touch Panel US

Hardware Version: A2

Datasheet

Issued: July 21, 2019

Edition: V1.0.0

Figure 1. KNX Modern Series DLP Touch Panel US

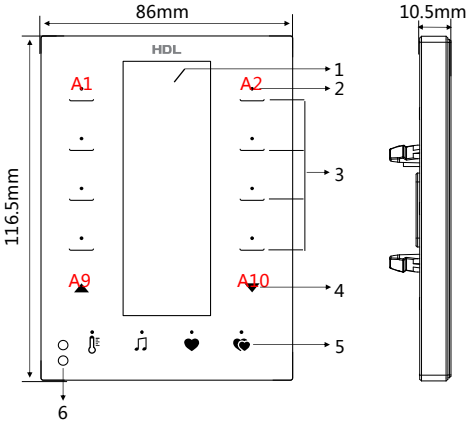

Figure 2. Dimensions - Front View

Figure 3. Dimensions - Side View

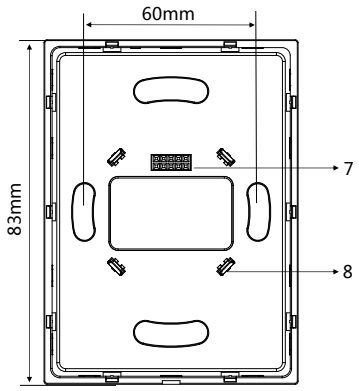

Figure 4. Dimensions - Back View

Overview

KNX Modern Series DLP Touch Panel US (See Figure 1) is a multi-function control panel for home automation with 8 control buttons, 2 page buttons and 4 shortcut buttons. 4 general pages, the display content of which can be modified via programming software according to users' preference, are for controlling lights and curtains, etc. and dedicated air conditioner page, floor heating page and background music page are available. The shortcut buttons can turn to certain page directly, which is convenient for users.

Functions

- Icon customization supported for page 1, 2, 3 and downloads to device via "HDL KNX Assistant Software"
- Brightness of the LCD and LED adjustable
- Touch button can be locked via KNX/EIB
- Button sound settable
- Keep pressing the first and last button (A1and A10) together for 2 seconds, the LED Indicators will flash and the panel will enter programming mode.
- Time Display and Temperature Display
- Control types: Switch control, Dimming control, Shutter control, Flexible control, Scene control, Sequence control, Percentage control, Threshold control, Pulse control, String(14bytes) control, Combination control, HVAC control, Audio control, Floor heating control, Button Lock, Button Trigger, Remote Trigger.

Important Notes

- The panel must be wall box mounted.
- The panel must work in conjunction with the power interface (M/PCI.3-A).
- The device is compliant with KNX standard and the parameters are set by the Engineering Tool Software (ETS).

Product Information

Dimensions - See Figure 2 - 4

1. LCD screen: 29x84(mm). Icon can be customized by user via management software.

2. Button indicator: Indicates the status of the controlled targets. The color and brightness of the indicator are customizable.

3. Control Button: To control targets.

4. Page button: For user to select different pages.

5. Shortcut button: Directly turns to a certain page.

6. Proximity sensor: Also known as wake-up function, when human body approaches the sensor, LCD screen will light up.

7. Communication interface: Connects to panel power interface.

8. Fastener: Connects to panel power interface.

Programming: Press Button A1 and Button A10 simultaneously for 2 seconds to enter programming mode.

Panel locking and unlocking: Press Button A2 and Button A9 simultaneously for 2 seconds to lock / unlock the panel.

Menu: Press Button A9 and Button A10 simultaneously for 2 seconds to enter menu page and change the following parameters:

C/F: Conversion between Celsius and Fahrenheit temperature.

AtDk: 1T/2T, the backlight will darken after no operation for delay time, and when operate the panel again,

1T: control target and brighten backlight immediately.

2T: The first operation is to brighten backlight, second operation is to control object

Page: Select the page you want to lock when you turn on Lock mode.

Lock: Turn on or off password lock mode. This function locks the menu page and the page selected by the Page option when there is no operation for 30 seconds. A password needs to be entered to unlock it.

Password: Set the password. The factory password and a new password should be entered. When the user first uses the panel, the factory password is "8552".

Product installation and disassembly

Installation - See Figure 5 - 7

Step 1. Install the wall box in the wall.

Step 2. Fix the power interface onto the wall box with screws.

Step 3. Hold the edge of panel, and insert the panel in the slots of power interface vertically.

Disassembly - See Figure 8

Step 1. Insert the panel gap with a slotted screwdriver.

Step 2. Hold the panel, pry up the panel gently and take down the panel.

Safety Precautions

- The installation and commissioning of the device must be carried out by HDL or the organization designated by HDL. For planning and construction of electric installations, the relevant guidelines, regulations and standards of the respective country are to be considered.
- The device should be wall box mounted. HDL takes no responsibility for all consequences caused by installation and wire connection which are not in accordance with this document.
- Please do not privately disassemble the device or change components, otherwise it may cause mechanical failure, electric shock, fire or body injury.
- Please resort to our customer service department or designated agencies for maintenance service. The warranty is not applicable for the product fault caused by private disassembly.

Package Contents

M/MPT14.1*1 / Datasheet*1

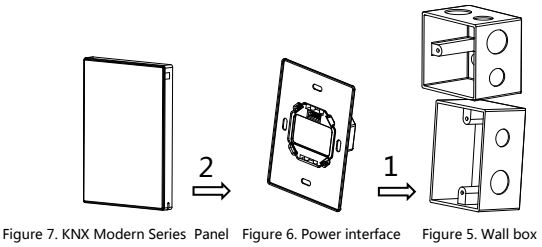

Figure 5 - 7. Installation

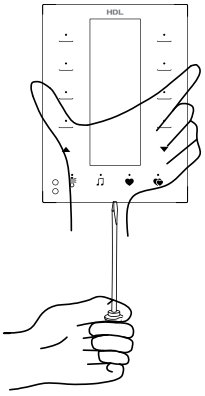

Figure 8. Disassembly

Technical Data

Basic Parameters	
Working voltage	21~30V DC
Working current	20mA/30V DC
Communication	KNX
Cable diameter of KNX terminal	0.6-0.8mm
External Environment	
Working temperature	-5℃~45℃
Working relative humidity	≤90%
Storage temperature	-20℃~60℃
Storage relative humidity	≤93%
Specifications	
LCD screen resolution	240x80
Dimensions	116.5×86×10.5(mm)
Net weight	130g
Housing material	Glass, PC, ABS, Aluminum
Installation	Wall box (See Figure 5 - 7)
Protection rating (Compliant with EN 60529)	IP20

Name and Content of Hazardous Substances in Products

Components	Hazardous substances					
	Lead (Pb)	Mercury (Hg)	Cadmium (Cd)	Chromium VI (Cr (VI))	Poly-brominated biphenyls (PBB)	Poly-brominated diphenyl ethers (PBDE)
Plastic	o	o	o	o	o	o
Hardware	o	o	o	o	-	-
Screw	o	o	o	×	-	-
Solder	×	o	o	o	-	-
PCB	×	o	o	o	o	o
IC	o	o	o	o	×	×
Glass	o	o	o	o	o	o

The symbol “-” indicates that the hazardous substance is not contained.
The symbol "o" indicates that the content of the hazardous substances in all the homogeneous materials of the component is below the limit requirement specified in the Standard IEC62321-2015.
The symbol “×” indicates that the content of the hazardous substance in at least one of the homogeneous materials of the part exceeds the limit requirement specified in the Standard IEC62321-2015.

KNX Cable Guide

KNX	KNX Cable
+	Red
-	Black

Technical support
E-mail: support@hdlautomation.com
Website: https://www.hdlautomation.com

©Copyright by HDL Automation Co., Ltd. All rights reserved.
Specifications subject to change without notice.